Note: You may Click on agenda item below to navigate to selected presentation section.

Contract Providers Transition Team (CPTT) Meeting Agenda

March 15, 2011
10:00 A.M. – NOON

- ✓ **Welcome**
- ✓ **Announcements**
- ✓ **MHSA IT Proposal and Project – Status**
- ✓ **Exchanging Clinical Data in an EHR World - Presentation**
- ✓ **HIPAA 5010 and ICD10 – Status and Timeline**
- ✓ **HITECH and Meaningful Use - Presentation**
- ✓ **MHSA IT Technology Plan II - Status**
- ✓ **Open Discussion**

Next Meeting – TBD

"To Enrich Lives Through Effective And Caring Service"

Click here to return to Agenda.

Project Status*

CONTRACT PROVIDER TECHNOLOGICAL NEEDS PROJECT

GORDON BUNCH – Presenter

*As of March 2, 2011

"To Enrich Lives Through Effective and Caring Service"

PROJECT TEAM

SR. INFORMATION SYSTEMS ANALYSTS

DEAN WHITEHEAD

GEORGE COLLAZO

ADMINISTRATIVE ASSISTANT II

JOSE GARCIA

MANAGER

GORDON BUNCH

Status Summary

- Fifty-four (54) Projects submitted
  - 24 Approved
  - 16 Resubmissions pending
  - 5 Recent submissions pending review
  - 9 Cancelled by Contractor
- First Project Closed – January 2011

Status Summary

- Twenty-two Technological Needs Funding Agreements
- $4,963,200 Committed to Contracts
- $4,253,074 Committed to Projects
- Contract Execution ~ 4-6 weeks post project approval

PROJECT PROPOSALS: Summary Statistics*

- Duration of review process from first submission to project approval (workdays)
  - Maximum 525
  - Minimum 18
  - Average 163
  - Median 85
  - Average submissions (Level 1): 2.8
  - Average submissions (Level 2): 1.5

*Includes only proposals that have completed the full cycle to project approval

PROJECT PROPOSALS: Summary Statistics*

Date First Proposal Received	Date of Proposal Approval	Total Days for Approval
January 20, 2009	October 27, 2010	**455**
January 22, 2009	May 24, 2010	**345**
February 3, 2009	September 20, 2010	**419**
February 5, 2009	March 1, 2011	**525**
February 11, 2009	May 13, 2010	**324**
May 15, 2009	September 21, 2009	**92**
July 6, 2009	May 17, 2010	**223**
August 12, 2009	August 2, 2010	**249**
August 12, 2009	November 8, 2009	**71**
September 1, 2009	December 3, 2009	**68**
November 16, 2009	September 22, 2010	**217**
November 17, 2009	September 8, 2010	**206**
AVERAGE APPROVAL TIME FOR 2009:		**266**

PROJECT PROPOSALS: Summary Statistics*

Date First Proposal Received	Date of Proposal Approval	Total Days for Approval
January 11, 2010	April 21, 2010	**71**
January 12, 2010	May 24, 2010	**93**
March 3, 2010	July 13, 2010	**93**
May 4, 2010	August 3, 2010	**64**
May 10, 2010	August 3, 2010	**60**
June 4, 2010	July 26, 2010	**36**
June 14, 2010	July 8, 2010	**18**
July 7, 2010	October 26, 2010	**78**
August 12, 2010	October 28, 2010	**54**
September 2, 2010	November 18, 2010	**53**
September 2, 2010	November 17, 2010	**52**
September 3, 2010	October 22, 2010	**34**
AVERAGE APPROVAL TIME FOR 2010:		**59**

PROJECT PROPOSALS:

- Substantially decreased duration from initial project submission to project approval attributed to:
  - Having a fully staffed unit
  - Staff Experience
  - One-on-One Workshops
    - 35 workshops Aug – Nov 2011

INVOICES: Summary Statistics*

- 64 Invoices submitted
  - 91 Submissions
  - 67% Approval Rate
  - 33% Denial Rate
  - $774,520 Paid
    - $332,104 Start-up

QUARTERLY PROJECT STATUS REPORTS: Summary Statistics*

- 14 Status Reports submitted
  - 20 Submissions
  - 45% Approval Rate
  - 55% Denial Rate
  - Overdue reports a major issue
  - Invoices will be held until overdue reports are submitted

Things to Consider

- If you have an approved project:
  - Know the terms and conditions of your contract
  - Stay current with invoicing, status reporting, asset reporting, and other business processes
  - Review your business documents carefully before submitting them

Things to Consider

- If you have a project under review:
  - Make sure you understand the comments provided after each review
  - Contact us if you have questions or points of disagreement
  - Resubmit your project proposal as soon as possible

Things to Consider

- If you have not submitted a project proposal:
  - Keep checking the CPTT Website for updates
  - Assess your readiness
  - Consider a one-on-one workshop before you begin your first draft
    - Sign-up sheet available

Questions

Back to Agenda

Click here to return to Agenda.

Exchanging Clinical Data in an EHR World

Los Angeles County

Department of Mental Health

CIOB – IT Enterprise Architecture & Standards

3/15/2011

Background

DMH works with Contract Providers who must share clinical data with DMH. This shared data is defined today by existing DMH paper clinical forms.

Why is this important?

- As the industry moves to Electronic Health Records (EHR), paper based integration will no longer be acceptable.
- Many of DMH Contract Providers already have their own EHR systems and DMH will be implementing its own EHR (IBHIS).
- An electronic integration strategy must be defined for both the short term (pre EHR) and long term (post EHR).
- DMH QA has published a policy on what clinical forms (data on) are required to be sent to DMH

Roles

Who is involved in these integration scenarios?

- DMH directly operated clinics
- Contract Providers with an EHR
- Paper based contract providers

Scope

- In Scope
  - Clinical Data Integration between different types of Contract Providers and DMH
- Out of Scope
  - Billing / Claiming Data Integration
  - Integration between DMH and the State
  - Clinical Data Integration between Contract Providers

How Electronic Interfaces should be defined

- Business defines ***what*** information should be shared and ***when*** it should be exchanged

- IT determines and designs ***how*** that can be done

Current State

DMH and Contract Providers share clinical data through paper forms and enter/view data in the IS.

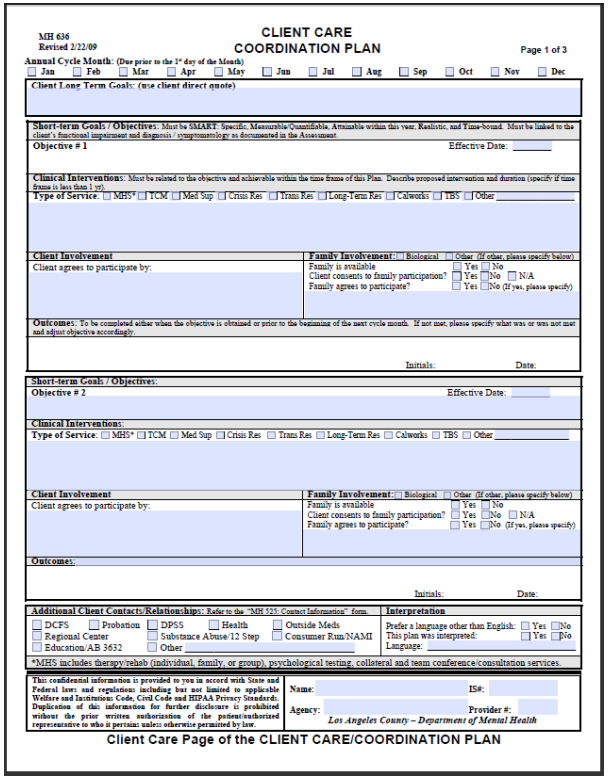

MH 636
Revised 2/22/09

CLIENT CARE
COORDINATION PLAN

Page 1 of 3

Annual Cycle Month: (Due prior to the 1st day of the Month)
☐ Jan ☐ Feb ☐ Mar ☐ Apr ☐ May ☐ Jun ☐ Jul ☐ Aug ☐ Sep ☐ Oct ☐ Nov ☐ Dec

Client Long Term Goals: (use client direct quote)

Short-term Goals / Objectives: Must be SMART: Specific, Measurable/Quantifiable, Attainable within this year, Realistic, and Time-bound. Must be linked to the client's functional impairment and diagnosis / symptomatology as documented in the Assessment.

Objective # 1 Effective Date: _____

Clinical Interventions: Must be related to the objective and achievable within the time frame of this Plan. Describe proposed intervention and duration (specify if time frame is less than 1 yr).

Type of Service: ☐ MHS* ☐ TCM ☐ Med Sup ☐ Crisis Res ☐ Trans Res ☐ Long-Term Res ☐ Calworks ☐ TBS ☐ Other _____

Client Involvement
Client agrees to participate by:

Family Involvement: ☐ Biological ☐ Other (If other, please specify below)
Family is available ☐ Yes ☐ No
Client consents to family participation? ☐ Yes ☐ No ☐ N/A
Family agrees to participate? ☐ Yes ☐ No (If yes, please specify)

Outcomes: To be completed either when the objective is obtained or prior to the beginning of the next cycle month. If not met, please specify what was or was not met and adjust objective accordingly.

Initials: Date:

Short-term Goals / Objectives:

Objective # 2 Effective Date: _____

Clinical Interventions:

Type of Service: ☐ MHS* ☐ TCM ☐ Med Sup ☐ Crisis Res ☐ Trans Res ☐ Long-Term Res ☐ Calworks ☐ TBS ☐ Other _____

Client Involvement
Client agrees to participate by:

Family Involvement: ☐ Biological ☐ Other (If other, please specify below)
Family is available ☐ Yes ☐ No
Client consents to family participation? ☐ Yes ☐ No ☐ N/A
Family agrees to participate? ☐ Yes ☐ No (If yes, please specify)

Outcomes:

Initials: Date:

Additional Client Contacts/Relationships: Refer to the "MH 525: Contact Information" form.
☐ DCFS ☐ Probation ☐ DPSS ☐ Health ☐ Outside Meds
☐ Regional Center ☐ Substance Abuse/12 Step ☐ Consumer Run/NAMI
☐ Education/AB 3632 ☐ Other _____

Interpretation
Prefer a language other than English: ☐ Yes ☐ No
This plan was interpreted: ☐ Yes ☐ No
Language: _____

*MHS includes therapy/rehab (individual, family, or group), psychological testing, collateral and team conference/consultation services.

This confidential information is provided to you in accord with State and Federal laws and regulations including but not limited to applicable Welfare and Institutions Code, Civil Code and HIPAA Privacy Standards. Duplication of this information for further disclosure is prohibited without the prior written authorization of the patient/authorized representative to who it pertains unless otherwise permitted by law.

Name: IS#:
Agency: Provider #:
Los Angeles County – Department of Mental Health

Client Care Page of the CLIENT CARE/COORDINATION PLAN

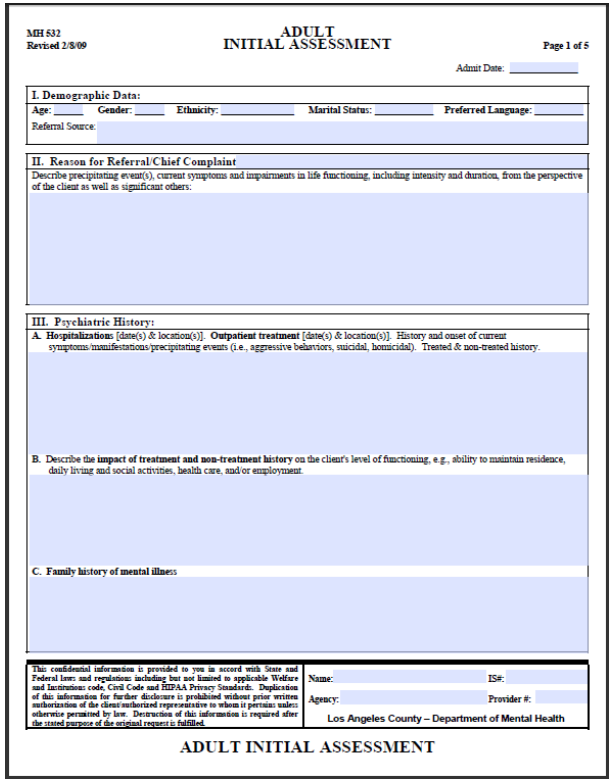

MH 532
Revised 2/8/09

ADULT
INITIAL ASSESSMENT

Page 1 of 5

Admit Date: _____

I. Demographic Data:
Age: ____ **Gender:** ____ **Ethnicity:** _____ **Marital Status:** _____ **Preferred Language:** _____
Referral Source:

II. Reason for Referral/Chief Complaint
Describe precipitating event(s), current symptoms and impairments in life functioning, including intensity and duration, from the perspective of the client as well as significant others:

III. Psychiatric History:
A. **Hospitalizations** [date(s) & location(s)]. **Outpatient treatment** [date(s) & location(s)]. History and onset of current symptoms/manifestations/precipitating events (i.e., aggressive behaviors, suicidal, homicidal). Treated & non-treated history.

B. Describe the **impact of treatment and non-treatment history** on the client's level of functioning, e.g., ability to maintain residence, daily living and social activities, health care, and/or employment.

C. **Family history of mental illness**

This confidential information is provided to you in accord with State and Federal laws and regulations including but not limited to applicable Welfare and Institutions code, Civil Code and HIPAA Privacy Standards. Duplication of this information for further disclosure is prohibited without prior written authorization of the client/authorized representative to whom it pertains unless otherwise permitted by law. Destruction of this information is required after the stated purpose of the original request is fulfilled.

Name: IS#:
Agency: Provider #:
Los Angeles County – Department of Mental Health

ADULT INITIAL ASSESSMENT

Content vs. Presentation

The same content can be presented in multiple ways. The following example for a Phone Number in XML:

```
<PhoneNumber>
        <CountryCode>011</CountryCode>
        <AreaCode>213</AreaCode>
        <Number>5551212</Number>
        <Extension>3456</Extension>
</PhoneNumber>
```

Can be presented in any of the following ways:

(213)555-1212

213-5551212 EXT 3456

2135551212 x3456

011-213-5551212 extension 3456

Data vs. Forms

- Contract Providers are concerned about the data that DMH requires them to capture
- Contract Providers should not be concerned about the DMH specific presentation of the data
- Why should DMH force every contract provider to have their own means to produce the DMH presentation of a clinical form?

XML (Extensible Markup Language)

- XML is an industry standard notation that is vendor / technology independent for representing data
- XML allows the separation of content and presentation
  - Many tools can render forms from XML (underlying technology is XSLT)
- Widely adopted by all vertical industries
- XML allows very strong structural data validation
- XML documents are self describing - do not need to look up column meanings like in EDI X12

Proposed Phased Approach

The road to full Contract Provider EDI integration should be taken in a phased approach

Current

- Paper based exchange of current clinical forms or access via DDE to IS

Phase 1 (Pre IBHIS)

- XML data exchange between Contract Providers and DMH for Contract Providers with an EHR
- Paper based exchange of current clinical forms for non EHR Contract Providers
- Contract Providers with an EHR that already produces DMH clinical forms may continue to do so

Phase 2 (Post IBHIS)

- Electronic Interfaces defined for Contract Providers to IBHIS

Phase 1 (Pre IBHIS) Architecture

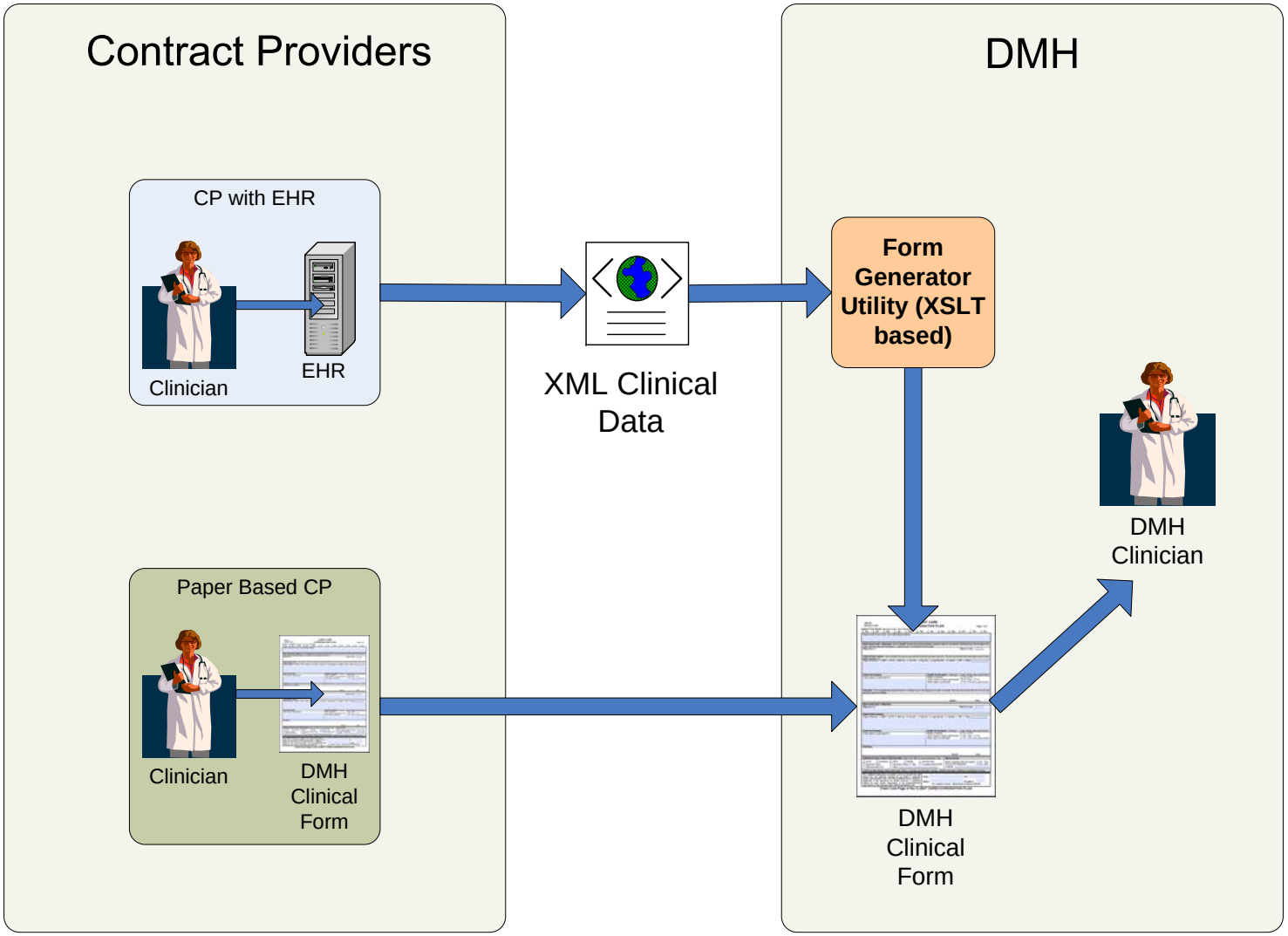

Phase 1

- DMH defines XML messages for clinical data
- Contract Providers with an EHR may produce XML messages and provide them to DMH and other contract providers. They do not need to generate any DMH forms.
- Contracts Providers without an EHR continue to provide current DMH clinical forms or do DDE in the IS
- Contract Providers with an EHR who already generate DMH forms may continue to provide those forms if they choose
- DMH creates utility to render XML messages to a usable presentation format for clinicians
  - This utility can be provided to any contract providers to use upon request.

Phase 1 Benefits

- Easier for contract providers to render XML than specific DMH defined forms
- Improved data quality as XML allows strong data validation
  - Required vs. non required fields
  - Data types such as numbers or consistent date formats
- Fewer anticipated XML messages to produce than clinical forms
- Contract Providers have no additional work if any wording or arrangement is changed on a DMH form.
- DMH does not need to communicate to all contract providers if a form changes unless the underlying data changes.
- Can leverage XML mapping work in the future when IBHIS arrives

Phase 1 Components

Component	Used By	Description
XSD Schema Files	Contract Providers with EHR systems	CPs will produce XML files from their EHR that validate against the provided XSD files from DMH
Clinical XML Companion Guide Document	Contract Providers with EHR systems	This manual will be used by CPs to ensure that they understand what DMH means for each element in the message definitions.
Clinical Information Transmittal Guide	Contract Providers with EHR systems	This manual will be used by CPs understand how to transmit XML messages to DMH in the Pre-IBHIS world.
Forms Generation Utility	DMH	This utility will be used by DMH to produce a form that clinicians may use from the XML. This utility will be obsolete and retired when IBHIS arrives as future messages will be mapped and stored into IBHIS.

XML Messages to Forms mapping

XML Message	Description	DMH Clinical Forms addressed
AdultAssessmentHistory	Assessment History of an adult client from a particular provider	(532) Adult Initial Assessment (633) COD Assessment Checklist (637) Annual Assessment Update (644F) EOB/UCC Short Assessment (659) Co-Occuring Joint Action Council Screening Instrument
ChildAdolescentAssessmentHistory	Assessment History of a child/adolescent client from a particular provider	(533) Child/Adolescent Initial Assessment (536) Child/Adolescent Initial Assessment Short Format (637) Annual Assessment Update (661) Supplemental TBS Assessment (676) Juvenile Justice Child/Adolescent Assessment
InfancyChildhoodAssessmentHistory	Assessment History of an infant/child client from a particular provider	(645) Infancy, Childhood & relationship Enrichment Initial Assessment (or 0-5) (637) Annual Assessment Update (661) Supplemental TBS Assessment
ClientCarePlan	The current treatment plan for a client	(636) Client Care Coordination Plan (636A) Client Care Coordination Plan: Client Care Page Addendum (636A) Client Car eCoordination Plan: Signature Page Addendum
ClientCoordinationPlan	The current Coordination plan for a client	(636) Client Care Coordination Plan (636A) Client Care Coordination Plan: Client Care Page Addendum (636A) Client Car eCoordination Plan: Signature Page Addendum

Phase 2 Integration Architecture

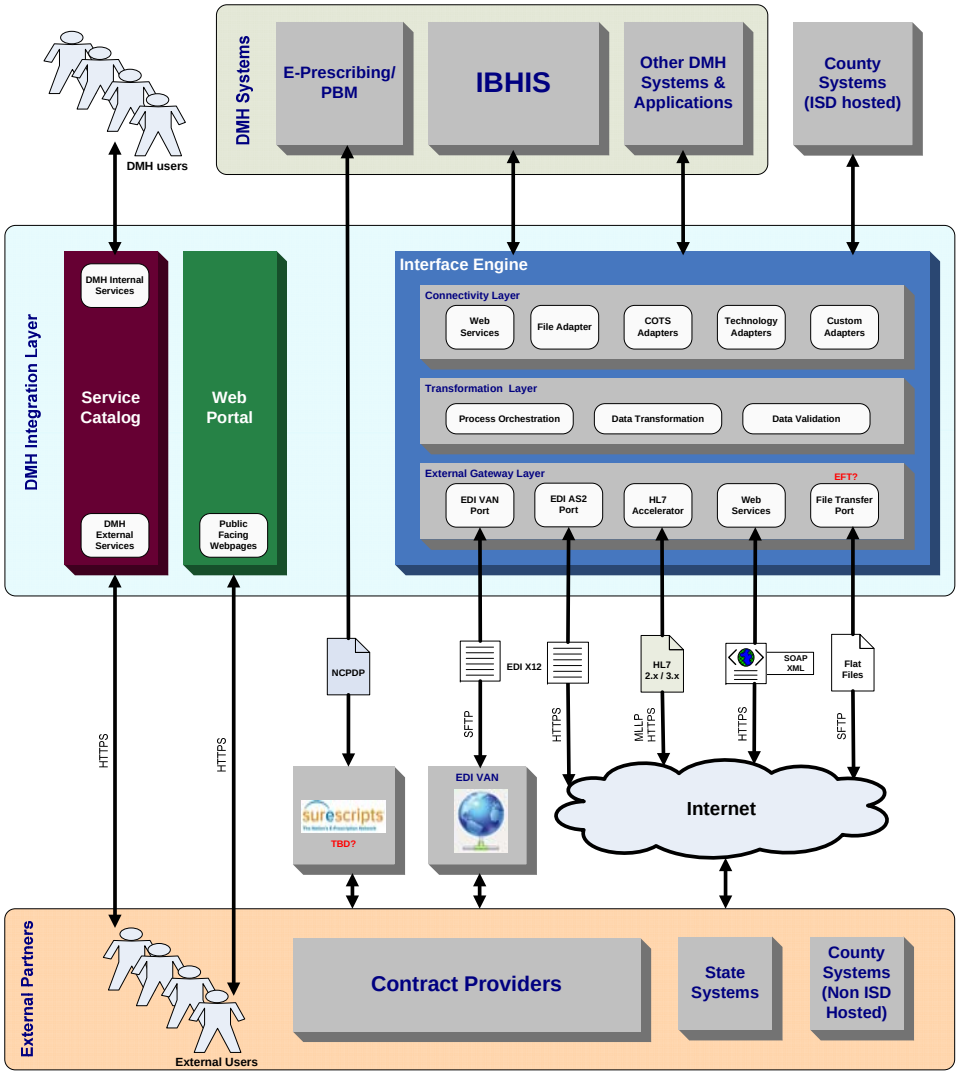

Phase 2

- DMH defines a set of interfaces and publishes to Contract Providers
  - Many clinical interfaces will use XML as the message payload
  - Current DMH paper clinical forms will no longer exist
- Defining the contract provider interfaces is a key component of the IBHIS project and overall DMH integration architecture

Back to Agenda

MH 636
Revised 6/22/09

CLIENT CARE COORDINATION PLAN

Annual Cycle Month: (Due prior to the 1st day of the Month)
☒ Jan ☐ Feb ☐ Mar ☐ Apr ☐ May ☐ Jun ☐ Jul ☐ Aug ☐ Sep ☐ Oct ☐ Nov ☐ Dec

Client Long Term Goals: (use client direct quote)
Client: "To not come here" Mother: "For [client] to do better in school and to be able to attend a public school."

Short-term Goals / Objectives: Must be **SMART**: Specific, Measurable/Quantifiable, Attainable within this year, Realistic, and Time-bound. Must be linked to the client's functional impairment and diagnosis / symptomatology as documented in the Assessment.

Objective # 1 Effective Date: 1/11/09
Increase following directions from caretaker and teachers from 0 x's to 3 x's per day.

Clinical Interventions: Must be related to the objective and achievable within the time frame of this Plan. Describe proposed intervention and duration (specify if time frame is less than 1 yr).

Type of Service: ☒ MHS* ☐ TCM ☐ Med Sup ☐ Crisis Res ☐ Trans Res ☐ Long-Term Res ☐ TBS ☐ Other _____

Reframe involvement in treatment to model speaking/listening interactions during individual therapy; direct caretakers to give simple directives and to request client repeat the directive back; assist client in identifying techniques to calm down when excited; assist client in understanding reasons and triggers for losing focus and escalating excitement; assist client in identifying importance of following directions

Client Involvement	Family Involvement: ☒ Biological ☐ Other (If other, please specify below)
Client agrees to participate by: Practicing speaking/listening skills with therapist; practicing skills learned at home and school and reporting back successes/feelings about changes	Family is available ☒ Yes ☐ No Client consents to family participation? ☒ Yes ☐ No ☐ N/A Family agrees to participate? ☒ Yes ☐ No (If yes, please specify) Bring client to sessions; practice skills with client; provide feedback to therapist; give praise for positive interactions

Outcomes: To be completed either when the objective is obtained or prior to the beginning of the next cycle month. If not met, please specify what was or was not met and adjust objective accordingly.

Initials: Date:

Short-term Goals / Objectives:

Objective # 2 Effective Date: 1/31/09
Decrease scattered attention from 95% of the school day to 80% of the school day

Clinical Interventions:

Type of Service: ☐ MHS* ☐ TCM ☒ Med Sup ☐ Crisis Res ☐ Trans Res ☐ Long-Term Res ☐ TBS ☐ Other _____

Assist client with behavior management through the use of medications

Client Involvement	Family Involvement: ☒ Biological ☐ Other (If other, please specify below)
Client agrees to participate by: Trying medications and learning about medications, including effects and side-effects. Client is willing to report positive or negative reactions.	Family is available ☒ Yes ☐ No Client consents to family participation? ☒ Yes ☐ No ☐ N/A Family agrees to participate? ☒ Yes ☐ No (If yes, please specify) To help client remember to take medications prior to leaving for school and going to bed at night; will report responses to meds

Outcomes:

Initials: Date:

Additional Client Contacts/Relationships: Refer to the "MH 525: Contact Information" form.

☒ DCFS ☐ Probation ☐ DPSS ☐ Health ☐ Outside Meds
☐ Regional Center ☐ Substance Abuse/12 Step ☐ Consumer Run/NAMI
☒ Education/AB 3632 ☐ Other _____

Interpretation

Prefer a language other than English: ☒ Yes ☐ No
This plan was interpreted: ☒ Yes ☐ No
Language: Spanish

*MHS includes therapy/rehab (individual, family, or group), psychological testing, collateral and team conference/consultation services.

This confidential information is provided to you in accord with State and Federal laws and regulations including but not limited to applicable Welfare and Institutions Code, Civil Code and HIPAA Privacy Standards. Duplication of this information for further disclosure is prohibited without the prior written authorization of the patient/authorized representative to who it pertains unless otherwise permitted by law.

Name: **IS#:**

Agency: **Provider #:**

Los Angeles County – Department of Mental Health

CLIENT CARE COORDINATION PLAN

Annual Cycle Month: January

Client Long Term Goals: (use client direct quote):

Client: "To not come here" Mother: "For [Client] to do better in school and to be able to attend a public school."

Short-term Goals / Objectives: Must be SMART: Specific, Measurable/Quantifiable, Attainable within this year, Realistic, and Time-bound. Must be linked to the client's functional impairment and diagnosis / symptomatology as documented in the Assessment

Increase following directions from caretaker and teachers from 0 x's to 3 x's per day

Effective Date: 2011-02-13

Objective Number: 1

Clinical Interventions: Must be related to the objective and achievable within the time frame of this Plan. Describe proposed intervention and duration (specify if time frame is less than 1 yr).

Reframe involvement in treatment to model speaking/listening interactions during individual

Type of Service: MHS

Duration: One year

Client Involvement: (Client agrees to participate by):

Practicing speaking/listening skills with thrapist; practicing skills learned

Family Involvement:

Is Family Available ☐ Client consents to family participation ☐

Family agrees to participate ☐ Is Family Biological ☐

Outcomes: To be completed either when the objective is obtained or prior to the begining of the next cycle month. If not met, please specify what was or was not met and adjust objective accordingly.

Initials: JMS Date: 2011-02-13

Short-term Goals / Objectives: Must be SMART: Specific, Measurable/Quantifiable, Attainable within this year, Realistic, and Time-bound. Must be linked to the client's functional impairment and diagnosis / symptomatology as documented in the Assessment

Increase following directions from caretaker and teachers from 0 x's to 3 x's per day

Effective Date: 2011-02-13

Objective Number: 1

Clinical Interventions: Must be related to the objective and achievable within the time frame of this Plan. Describe proposed intervention and duration (specify if time frame is less than 1 yr).

Reframe involvement in treatment to model speaking/listening interactions during individual

Type of Service: MHS

Duration: One year

Client Involvement: (Client agrees to participate by):

Practicing speaking/listening skills with thrapist; practicing skills

Family Involvement:

Is Family Available ☐ Client consents to family participation ☐

Family agrees to participate ☐ Is Family Biological ☐

Outcomes: To be completed either when the objective is obtained or prior to the begining of the next cycle month. If not met, please specify what was or was not met and adjust objective accordingly.

Initials: JMS Date: 2011-02-13

Additional Client Contacts / Relationships:

Education-AB 3632

Other Additional Client Contacts / Relationships

Friends

Interpretation

Is English Preferred ☐

Is Plan Interpreted ☐

Interpreted Language: Spanish

This confidential information is provided to you in accord with State and Federal laws and regulations including but not limited to applicable Welfare and Institutions Code, Civil Code and HIPPAPrivacy Standards. Duplication of this information for further disclousure is prohibited without the prior written authorition of the patient/authorized representative to who it pertains unless otherwise permitted by law.

Name: John Doe IS #: 123456

Agency: HealthCare Provider #: P123456

SAMPLE XML FILE for CLIENTCAREPLAN


```xml
<ClientCarePlan xsi:schemaLocation="http://www.dmh.lacounty.gov/cdm/v1/2010/11/10 DMH_Contract_Provider_Clinical_Data_02-01-2011_v1_0.xsd" xmlns="http://www.dmh.lacounty.gov/cdm/v1/2010/11/10" xmlns:xsi="http://www.w3.org/2001/XMLSchema-instance">
	<Header>
		<ClientName>John Doe</ClientName>
		<Agency>HealthCare</Agency>
		<ClientIDNumber>123456</ClientIDNumber>
		<ProviderNumber>P123456</ProviderNumber>
	</Header>
	<AnnualCycleMonth>January</AnnualCycleMonth>
	<ClientLongTermGoals>Client: "To not come here"   Mother: "For [Client] to do better in school and to be able to attend a public school."</ClientLongTermGoals>
	<ShortTermGoals-Objectives>
		<ObjectiveNumber>1</ObjectiveNumber>
		<ObjectiveText>Increase following directions from caretaker and teachers from 0 x's to 3 x's per day</ObjectiveText>
		<EffectiveDate>2011-02-13</EffectiveDate>
		<ClinicalIntervention>
			<Text>Reframe involvement in treatment to model speaking/listening interactions during individual therapy; direct caretakers to give simple directives and to request client repeat the directive back; assist client in identifying techniques to clam down when excited; assist client in understanding reasons and triggers for losing focus and escalating excitement; assist client in identifying importance of following directions</Text>
			<Duration>One year</Duration>
		</ClinicalIntervention>
		<TypeOfService>MHS</TypeOfService>
		<OtherTypeOfService>String</OtherTypeOfService>
		<ClientInvolvement>Practicing speaking/listening skills with thrapist; practicing skills learned at home and school and reporting back successes/feelings about changes</ClientInvolvement>
		<FamilyInvolvement>
			<IsFamilyBiological>false</IsFamilyBiological>
			<NonBiologicalFamilyTypeDescription>String</NonBiologicalFamilyTypeDescription>
			<IsFamilyAvailable>false</IsFamilyAvailable>
			<ClientConsentsToFamilyParticipation>Yes</ClientConsentsToFamilyParticipation>
			<FamilyAgreesToParticipate>false</FamilyAgreesToParticipate>
			<FamilyParticipationDescription>String</FamilyParticipationDescription>
		</FamilyInvolvement>
		<Outcome>
			<Text></Text>
			<Initials>JMS</Initials>
			<Date>2011-02-13</Date>
		</Outcome>
		<StaffSignature>
			<SignatureType>PhD, PsyD, LCSW, MFT, RN, CNS</SignatureType>
			<SignatureDate>1967-08-13</SignatureDate>
		</StaffSignature>
		<ClientSignatureIsPresent>true</ClientSignatureIsPresent>
		<ClientSignatureDate>1967-08-13</ClientSignatureDate>
		<OtherSignatureIsPresent>true</OtherSignatureIsPresent>
		<OtherSignatureDate>1967-08-13</OtherSignatureDate>
		<MissingSignatureReason>String</MissingSignatureReason>
		<PlanToObtainSignature>String</PlanToObtainSignature>
		<ObjectiveAcceptedByClient>true</ObjectiveAcceptedByClient>
		<ObjectiveAcceptedDeniedStaffInitialsPresent>true</ObjectiveAcceptedDeniedStaffInitialsPresent>
		<ObjectiveAcceptedDeniedDate>1967-08-13</ObjectiveAcceptedDeniedDate>
	</ShortTermGoals-Objectives>
	<AdditionalClientContacts-Relationship>Education-AB 3632</AdditionalClientContacts-Relationship>
	<OtherAdditionalClientContacts-Relationship>Friends</OtherAdditionalClientContacts-Relationship>
	<Interpretation>
		<IsEnglishPreferred>true</IsEnglishPreferred>
		<IsPlanInterpreted>true</IsPlanInterpreted>
		<InterpretedLanguage>Spanish</InterpretedLanguage>
	</Interpretation>
</ClientCarePlan>
```

SAMPLE FROM CLINICAL XML COMPANION GUIDE - ClientCarePlan Message Guideline

Element	Type	Occurs	Min Length	Max Length	Description	Rules
ClientCarePlan		1			The treatment plan for the client guides client care; it encompasses the agreement established between service delivery staff and the client which is used to guide service delivery/interventions.	Completion is required prior to the end of the initial two-month Intake Period or within one month for clients with existing open episodes anywhere within the Los Angeles County DMH system of care. For Crisis Residential Services, must be completed within 72 hours of admission to the program.
| Header		1				
|| ClientName	String	1			Client's first and last name as identified in the IS.	
|| Agency	String	1			Name of the Agency completing the information.	
|| ClientIDNumber	String	1			Client's ID Number as identified in the IS.	
|| ProviderNumber	String	1	1	5	Provider Number (reporting unit) of the Agency completing the information.	
| AnnualCycleMonth	Dropdown	1			Month of admission to the Provider completing the Care Plan	All goals and objectives must be in-synch with this month.
| ClientLongTermGoals	String	1			Direct client quote regarding the client's long term goal; the client's overall picture for their recovery (what does he/she want to work toward becoming - personally, vocationally, socially or any other.)	
| ShortTermGoals-Objectives		1..∞			The behavioral milestones the mental health system helps the client reach in order to achieve his/her long-term goal.	An objective must be present for each type of services provided to the client for on-going treatment.
|| ObjectiveNumber	Integer	1			Numerical number to identify the objective and associate it with signatures	In chronological order as objectives are added.
|| ObjectiveText	String	1			The behavioral milestone recorded in SMART language (specific, measurable, attainable, realistic and time-bound) which must be linked to the client's functional impairment and diagnosis/symptomatology as documented in the Assessment.	
|| EffectiveDate	Date	0			The date services addressing the objective will begin.	
|| ClinicalIntervention		0..∞			The actions/interventions staff and others will take to help achieve the identified objectives.	
||| Text	String	1			Types of Services are the ways in	

DRAFT

Click here to return to Agenda.

HIPAA 5010
STATUS and TIMELINE

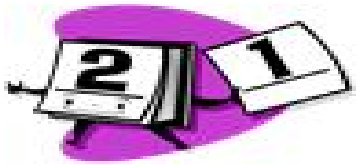

Contract Provider Transition Team

March 15, 2011

"To Enrich Lives Through Effective And Caring Service"

HIPAA 5010
Status and Timeline

Review – what is it?

- ✓ **Federal legislation to upgrade the HIPAA administrative transactions from version 4010 to 5010 by January 1, 2012**
- ✓ **Impacts claims, remittance, eligibility and claim status transactions**
- ✓ **New versions have different data element requirements**

HIPAA 5010
Status and Timeline

Review – what is it?

- ✓ **Software must be modified to produce and exchange the new formats**
- ✓ **Business processes may need to change to capture additional data elements**
- ✓ **Transition to the new formats must be coordinated with your trading partners**

HIPAA 5010
Status and Timeline

Review – what does it do for us?

- ✓ **Allows the exchange of ICD-10 diagnosis codes**
- ✓ **Provides greater clarity on how the transactions are to be populated**
- ✓ **Provides additional guidance on using the NPI**

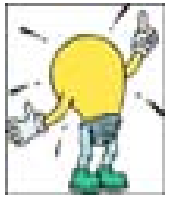

Many resources on the web providing more detailed information

HIPAA 5010 – DMH Data Flow and Impact to the Contract Provider Community

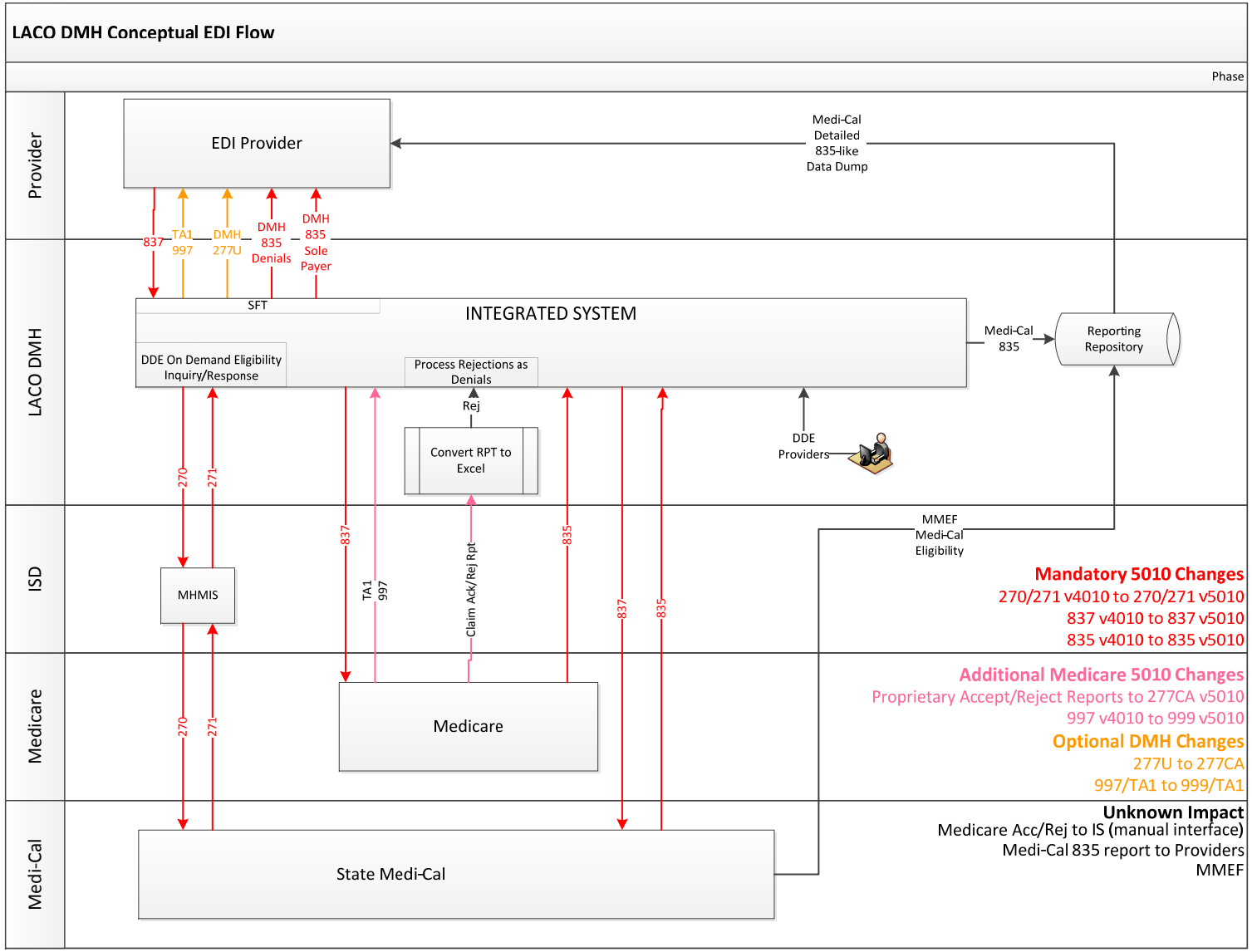

"To Enrich Lives Through Effective And Caring Service"

HIPAA 5010
Status and Timeline

Potential Changes to DMH Claims & Remittance

- ✓ **Remove legacy IDs**
- ✓ **New location for DMH Plan ID**
- ✓ **Nine digit zip codes in the Billing Provider and Service Facility loops**
- ✓ **EPSDT- dedicated location for both 837P & 837I claims**

HIPAA 5010
Status and Timeline

Potential Changes to DMH Claims & Remittance

- ✓ **Modifier changes consistent with state requirements**
- ✓ **New Institutional Segment**
- ✓ **835 CR Adjustment Group will use a new Adjustment Group**

HIPAA 5010
Status and Timeline

Key Dates

DMH Companion Guides	Late-May
5010 Testing with Providers	Mid-October
Final 4010 Transactions	December
5010 Cutover	January 1, 2012

Back to Agenda

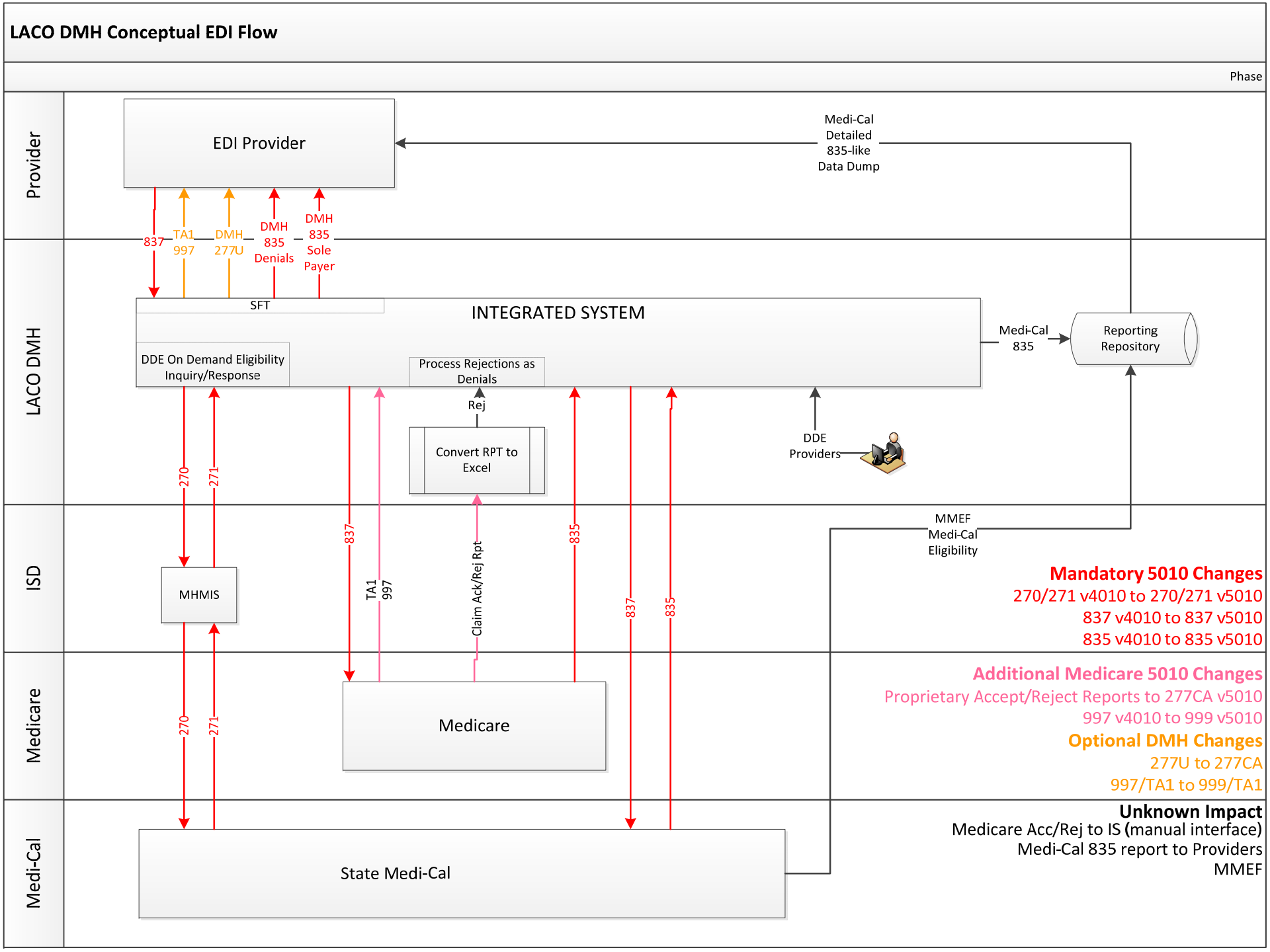
LACO DMH Conceptual EDI Flow
Phase
Provider
LACO DMH
ISD
Medicare
Medi-Cal
EDI Provider
Medi-Cal Detailed 835-like Data Dump
837
TA1 997
DMH 277U
DMH 835 Denials
DMH 835 Sole Payer
SFT
INTEGRATED SYSTEM
DDE On Demand Eligibility Inquiry/Response
Process Rejections as Denials
Medi-Cal 835
Reporting Repository
Rej
Convert RPT to Excel
DDE Providers
270
271
MHMIS
837
TA1 997
Claim Ack/Rej Rpt
835
837
835
MMEF Medi-Cal Eligibility
Mandatory 5010 Changes
270/271 v4010 to 270/271 v5010
837 v4010 to 837 v5010
835 v4010 to 835 v5010
Medicare
Additional Medicare 5010 Changes
Proprietary Accept/Reject Reports to 277CA v5010
997 v4010 to 999 v5010
Optional DMH Changes
277U to 277CA
997/TA1 to 999/TA1
270
271
Unknown Impact
Medicare Acc/Rej to IS (manual interface)
Medi-Cal 835 report to Providers
MMEF
State Medi-Cal

Click here to return to Agenda.

LAC DMH
LOS ANGELES COUNTY DEPARTMENT OF MENTAL HEALTH

Health Information Technology for Economic and Clinical Health Act

HITECH and Meaningful Use

- An Overview -

CPTT Workgroup - March 15, 2011

"To Enrich Lives Through Effective And Caring Service"

HITECH and Meaningful Use

- An Overview -

- ✓ Background
- ✓ What is “Meaningful Use (MU)”
- ✓ MU Criteria – Core and Menu Measures
- ✓ Federal and State Incentives
- ✓ Eligibility and Registration
- ✓ Payment Schedule – Medi-Cal and Medicare
- ✓ Vendor Certification
- ✓ Next Steps
- ✓ Useful Links

Background

"To Enrich Lives Through Effective And Caring Service"

Background

- 2004 – Executive Order by President Bush
  - Electronic Health Records by 2014
  - Created Office of National Coordinator for Health Information Technology (ONCHIT)
  - Certification Commission for Health Information Technology (CCHIT) was founded and approved by ONCHIT

Background

- 2005 – 2006 – CCHIT Established
  - 3-year contract to develop Electronic Health Records systems (EHRS) certification criteria
  - Official certification body
  - CCHIT continues to release guidelines for specialty practices

- 2006 – 2009 – EHRS Guidelines Released by CCHIT
  - Ambulatory EHRS – 2006
  - Inpatient EHRS Guidelines – 2007

Background

- 2009 – American Recovery & Reinvestment Act (ARRA)
  - **Included the HITECH Act: $27B budget**
  - **ONC responsible for implementing the HITECH Act**
- 2010 – EHR Standards and Certification
  - **ONC Final Rules published:**
    - **Initial Set of Standards**
    - **Implementation Specifications**
    - **Certification Criteria**
  - **CMS Final Rules published:**
    - **Medicare and Medicaid EHR Incentive Program (MU)**
  - **CCHIT Behavioral Health Certification Criteria**

Background

- 2011 – Age of Meaningful Use
  - ONC published the Final Rule on Establishment of the Permanent Certification Program for Health Information Technology
  - Registration for Meaningful Use incentives began (January)

Background

- ONC – Health and Human Services (HHS) entity responsible for coordinating implementation of a nationwide health information technology infrastructure.

Responsibilities include:

- State Health Information Exchanges (HIE)
- Providing grant funding to States to implement programs supporting the HIE infrastructure
- Responsible for the National Health Information Network (NHIN)
- Provide grants to Regional Extension Centers (RECs)

Background

- CMS – Federal entity under HHS responsible for developing and administrating the meaningful use Medicare and Medicaid incentives programs

Key responsibilities include:

- Manage Medicare incentive payments
- Manage enrollment of eligible professionals and eligible hospitals for the meaningful use incentive program

What is “Meaningful Use”

“To Enrich Lives Through Effective And Caring Service”

What is "Meaningful Use"

MU is a series of goals, objectives and measures that enable significant and measureable improvements through a transformed healthcare delivery system.

Five MU goals – 2011:

- Improve quality, safety and efficiency and reduce healthcare disparities
- Engage patient and families in their health care
- Coordinate care
- Raise the health status of the population
- Maintain privacy and security of systems and data

What is “Meaningful Use”

The HITECH Act specifies three main components of meaningful use:

- The use of a certified EHR in a meaningful manner
- The use of certified EHR technology for electronic exchange of health information to improve quality of care
- The use of certified EHR technology to submit clinical quality and other measures

Meaningful Use Criteria
Core and Menu Measures

"To Enrich Lives Through Effective And Caring Service"

Meaningful Use Criteria: Core and Menu Measures

Measures are defined for each of three stages:

- Stage 1 (2011) – current criteria available
- Stage 2 (2013) - criteria released for public comment
- Stage 3 (2015) – prospective criteria available

Meaningful Use Criteria: Core and Menu Measures

- Measures are defined for Eligible Professionals (EPs) and Eligible Hospitals (EHs)
- Measures may contain some exclusions depending on the type of practice
- Core Measures are required, menu measures require a minimum number based on a subset of menu criteria
- Clinical Quality Measures – core, alternate

Meaningful Use Criteria: Core and Menu Measures

Eligible Professionals – Stage 1

Measures:	Core	Menu
Improving Quality, Safety, Efficiency, and Reducing Health Disparities	11	4
Engage Patients and Families	2	2
Improve Care Coordination	1	2
Ensure adequate privacy and security of systems and data	1	2
Clinical Quality Measures (3 additional of 38)	3	3

Federal and State Incentives

"To Enrich Lives Through Effective And Caring Service"

Federal and State Incentives

- Incentive based on attestation of meaningful use through the use of an ONC certified EHR system
- Medicare and Medi-Cal have different incentive programs for EP(s) and EH(s)
- Must elect to participate in only one incentive program during the registration process
- May elect to change from one incentive program to another, but this can only be done once prior to 2015

Federal and State Incentives

- CMS administers the Medicare Incentive Program
- CMS distributes the Medicaid incentive funding to the States
- State administers the Medi-Cal Incentive Program
- State Medi-Cal Program has not been initiated

Eligibility

&

Registration

"To Enrich Lives Through Effective And Caring Service"

Eligibility and Registration

- Medi-Cal - Eligible Professionals (Mental Health)*
  - Psychiatrists (MD)
  - Medical Doctor (MD)
  - Doctor of Osteopathy (DO)
  - Nurse Practitioner (NP)

✓ Minimum 30% Medi-Cal client volume criteria.
✓ Must see 50% of clients at a facility with certified EHR
✓ Non-hospital based professionals

*Federal Legislation pending to expand the definition of eligible professionals for Mental Health

Eligibility and Registration

- Medicare - Eligible Professionals (Mental Health)*
  - Psychiatrists (MD)
  - Medical Doctor (MD)
  - Doctor of Osteopathy (DO)

✓Non-hospital based professionals

*Federal Legislation pending to expand the definition of eligible professionals for Mental Health

Eligibility and Registration

- Eligible Hospitals*
  - Acute Care Hospitals
  - Critical Access Hospitals
  - Children's Hospitals (Medi-Cal Only)

*Federal Legislation pending to expand the definition of eligible hospitals for Mental Health

Eligibility and Registration

- Medi-Cal - Eligible Professionals
  - Register on CMS Website – now available
  - Register on the State Website – available April?
- Medicare - Eligible Professionals
  - Register on CMS Website – now available
  - Register in Provider Enrollment, Chain and Ownership System (PECOS)

Eligibility and Registration

- Must have a valid NPI.
- Register for NPI via the National Plan and Provider Enumeration System (NPPES)
- EP may be required to assign incentive payment to a single taxpayer ID number.

Payment Schedule

"To Enrich Lives Through Effective And Caring Service"

Payment Schedule

- Medi-Cal
  - Total incentive payment - $63,750 over six years
  - Year 1 - $21,250
  - Years 2-6 - $8,500 per year
  - Program ends in 2021
  - Last year to begin is 2016 for maximum incentive

Payment Schedule

- Medi-Cal
  - Attestation period begins – unknown
  - Incentive payments begin – unknown
  - Year 1 – may receive payment if EHR is adopted, implemented or upgraded (A/I/U)
  - Years 2-6 – must meet MU criteria

Payment Schedule: Medi-Cal

Year Paid	MU of EHR starting in year:					
	2011	2012	2013	2014	2015	2016
2011	$21,250					
2012	$8,500	$21,250				
2013	$8,500	$8,500	$21,250			
2014	$8,500	$8,500	$8,500	$21,250		
2015	$8,500	$8,500	$8,500	$8,500	$21,250	
2016	$8,500	$8,500	$8,500	$8,500	$8,500	$21,250
2017		$8,500	$8,500	$8,500	$8,500	$8,500
2018			$8,500	$8,500	$8,500	$8,500
2019				$8,500	$8,500	$8,500
2020					$8,500	$8,500
2021						$8,500
Total	$63,750	$63,750	$63,750	$63,750	$63,750	$63,750

Payment Schedule

- Medicare
  - Total incentive payment - $44,000 over five years
  - Declining payments over five years depending on first year of MU
  - Program ends in 2016
  - Last year to begin is 2012 for maximum incentive payment
  - Years 1-5 – must meet MU criteria

Payment Schedule

- Medicare
  - April 2011 – Attestation period begins
  - May 2011 – Incentive payments begin
  - Must claim at least $24K to receive the full first year payment of $18K
  - Incentive payment cannot exceed 75% of claim amount
  - Beginning in 2015, Medicare fee reductions will take effect if EP does not meet MU criteria

Payment Schedule: Medicare

Year Paid	MU of EHR starting in year:			
	2011	2012	2013	2014
2011	$18,000			
2012	$12,000	$18,000		
2013	$8,000	$12,000	$15,000	
2014	$4,000	$8,000	$12,000	$12,000
2015	$2,000	$4,000	$8,000	$8,000
2016		$2,000	$4,000	$4,000
Total	$44,000	$44,000	$39,000	$24,000

Payment Schedule: Medicare

Failure To Demonstrate MU by Year:			
2015	2016	2017	2018
Penalty Applied:			
-1%	-2%	-3%	-4%*

Vendor Certification

"To Enrich Lives Through Effective And Caring Service"

Vendor Certification

- EHR must be certified through an ONC certified testing body. ONC certifies based on the Stage 1 criteria
- Stage 2 and Stage 3 will require recertification
- If the vendor modifies the certified software, it may require retesting and recertification
- Certification only applies to the specific Product and Version listed

Vendor Certification

- Link to a list of certified EHRs is available. This list is updated frequently
- Three behavioral health vendor products are certified as Complete EHR under Stage 1 and one vendor is certified as a Modular EHR. These vendors are currently used by DMH providers.

Vendor	Product	Version
DeFran	Evolv-CS	Version 8.4
ECHO	Clinician's Desktop	Version 8.1.3
Netsmart	Avatar	Version 2011
UNI/CARE (Modular)	Pro-Filer	Version 2011

Next Steps

"To Enrich Lives Through Effective And Caring Service"

Next Steps

- ✓ Review website links and material
- ✓ Contact a Regional Extension Center (REC) – HITEC-LA or COREC (Orange County)
- ✓ Assess your organization's readiness to meet meaningful use
- ✓ Talk to your vendor about MU and the timeline for certification
- ✓ Develop a ROI and rollout strategy for MU
- ✓ Develop a project plan and Implement a certified EHR
- ✓ Validate and monitor MU measurements on an on-going basis

Useful Links

"To Enrich Lives Through Effective And Caring Service"

USEFUL LINKS

- CMS Meaningful Use Website:

  http://www.cms.gov/EHRIncentivePrograms/

- CMS EHR Incentive Program ListServ:
  http://www.cms.gov/EHRIncentivePrograms/65_CMS_EHR_Listserv.asp

- CMS Meaningful Use Measures:
  http://www.cms.gov/EHRIncentivePrograms/Downloads/EP-MU-TOC.pdf

- Medi-Cal Incentive Program:

  http://www.medi-cal.ehr.ca.gov/

USEFUL LINKS

- HITEC-LA:
  http://www.hitecla.org/

- COREC (Orange County):
  http://www.caloptima.org/

- Certified EHR Software:
  http://onc-chpl.force.com/ehrcert

Questions

Back to Agenda

"To Enrich Lives Through Effective And Caring Service"

Stage 1 – Core, Menu and Clinical Quality Measures for Eligible Professionals

Eligible Professional (EP)	**Stage 1 Core Measures**		
Number	**Objective**	**Measure**	**Exclusion**
1	Use computerized order entry (CPOE) for medication orders.	>30% of patients, transmission of the order to the pharmacy is not required	Any EP who writes < 100 prescriptions
2	Implement drug-drug and drug-allergy interaction checks.	Functionality must be enabled for the entire EHR reporting period	Any EP who writes < 100 prescriptions
3	Maintain an up-to-date problem list of current and active diagnoses.	>80% of patients, if no active diagnosis than an entry must exist that states this fact	None
4	Generate and transmit permissible prescriptions electronically (eRx).	>40% of all permissible prescriptions	Any EP who writes < 100 prescriptions
5	Maintain active medication list.	>80% of patients, if no active medications then an entry must exist that states this fact	None
6	Maintain active medication allergy list.	>80% of patients, if no known medical allergies then an entry must exist that states this fact	None
7	Record all of the following demographics: preferred language, gender, race, ethnicity and date of birth.	>50% of patients have demographics	None
8	Record and chart changes in the following vital signs: Height, weight, blood pressure, body mass index (BMI), growth chards for children 2-20 years, including BMI.	>50% of patients >= 2 years old, height, weight and BP are recorded as structured data.	EP who either sees no patients two years or older, or who believes that all three vital signs have no relevance to their scope of practice.

Stage 1 – Core, Menu and Clinical Quality Measures for Eligible Professionals

Eligible Professional (EP)	**Stage 1 Core Measures**		
Number	**Objective**	**Measure**	**Exclusion**
9	Record smoking status for patients 13 year old or older.	>50% of patients 13 years old or older have smoking status recorded as structured data	EP who sees no patients 13 years or older
10	Report ambulatory clinical quality measures to CMS or Medi-Cal.	Successfully report to CMS or Medi-Cal ambulatory clinical quality measures selected by CMS or Medi-Cal in the manner specified by CMS or Medi-Cal.	None
11	Implement one clinical decision support rule relevant to specialty or high clinical priority along with the ability to track compliance with that rule.	Implement one rule	None
12	Provide patients with an electronic copy of their health information (including diagnostics test results, problem list, medication lists, medication allergies) upon request.	>50% of patients who request are given a copy within three business days	No requests during the reporting period
13	Provide clinical summaries for patients for each office visit.	>50% of all office visits within three days, can be provided through PHR, Secure email, electronic media such as a CD or USB or printed	No office visits during the reporting period
14	Capability to exchange key clinical information among providers of care and patient authorized entities electronically.	Performed at least one test of capability from EHR technology	None

Stage 1 – Core, Menu and Clinical Quality Measures for Eligible Professionals

Eligible Professional (EP)	**Stage 1 Core Measures**		
Number	**Objective**	**Measure**	**Exclusion**
15	Protect electronic health information created or maintained by the certified EHR through the implementation of appropriate technical capabilities.	Conduct or review a security risk analysis and implement updates and correct identified security deficiencies as part of risk management process	None

Stage 1 – Core, Menu and Clinical Quality Measures for Eligible Professionals

Eligible Professional (EP)	**Stage 1 Menu Set Measures**		
Number	**Objective**	**Measure**	**Exclusion**
1	Implement drug formulary checks.	Functionality has been enabled and has access to at least one internal or external formulary for entire reporting period	None
2	Incorporate clinical lab test results into EHR structured data.	<40% of all clinical lab tests results ordered by the provider or an authorized provider whose results are expressed as +/-/#	No lab orders with results expressed as +/-/#
3	Generate patient lists by specific conditions to use for quality improvement, reduction or disparities, research or outreach.	Generate at least one report listing patients with a specific condition	None
4	Send patient reminders per patient preference for preventive/follow-up care.	Reminders sent to at least 20% of all patients seen that are >= 65 years or age or <= 5 years of age	No patients >= 65 years old or <= 5 years old
5	Provide patients with timely electronic access to their health information (including lab results, problem list, medication lists and allergies) within four business days of the information being available to the EP.	>10% of all patients are provided timely electronic access to their health information. Provider has discretion to withhold certain information	No required information created
6	Use certified EHR technology to identify patient-specific education resources and provide those resources to the patient if appropriate	>10% of patients are provided patient specific education resources	None
7	Perform medication reconciliation when a patient is received from another setting of care, provider of care or when EP believes an encounter is relevant	>50% of transitions of care where patient is transferred in to providers care	No transitions of care where the provider was the receiving part of the transition

Stage 1 – Core, Menu and Clinical Quality Measures for Eligible Professionals

Eligible Professional (EP)	**Stage 1 Menu Set Measures**		
Number	**Objective**	**Measure**	**Exclusion**
8	EP who transition their patient to another setting of care, provider of care or refers their patient to another provider of care should provide a summary care record for each transition of care or referral.	>50% of transition of care where patient is transferred out of providers care or referred to another provider	No patients transferred to another setting or referred to another provider
9	Capability to submit electronic data to immunization registries or immunization information systems and actual submission according to applicable law and practice.	Perform at least one test from EHR technology and verify success	No immunizations provided during reporting period
10	Capability to submit electronic syndromic surveillance data to public health agencies and actual submission according to applicable law and practice.	Perform at least one test of certified EHR technology capacity to provide electronic syndromic surveillance data to public health agencies and follow-up submission if the test is successful	No reportable syndromic information during the reporting period, does not submit such information to any public health agency

Stage 1 – Core, Menu and Clinical Quality Measures for Eligible Professionals

Eligible Professional (EP)	**Stage 1 Clinical Quality Measures – Core Set**	*NQF – National Quality Forum *PQRI – Physician's Quality Reporting Initiative
Number	**Objective**	**Measure**
NQF* 0013	Hypertension: Blood Pressure Measurement	% of patient visits for patients >= 18 years old with a diagnosis of hypertension who have been seen for at least 2 office visits, with BP recorded
NQF 0028	Preventative Care and Screening Measure Pair: a) Tobacco User Assessment, b) Tobacco Cessation Intervention	a) % of patients >= 18 years old seen multiple times within 24 months and asked about tobacco use at least one time b) % of patients >= 18 years old seen multiple time within 24 months and have received cessation intervention
NQF 0421 PQRI 128	Adult Weight Screening and Follow-up	% of patients >= 18 years old with a calculated BMI in the past six months or during the current visit documented AND if outside parameter follow-up plan is documented

Stage 1 – Core, Menu and Clinical Quality Measures for Eligible Professionals

Eligible Professional (EP)	**Stage 1 Clinical Quality Measures – Alternate Core Set**	*NQF – National Quality Forum *PQRI – Physician's Quality Reporting Initiative
Number	**Objective**	**Measure**
NQF 0024	Weight Assessment and Counseling for Children and Adolescents	% of patients 2-17 years of age who have had an outpatient visit with primary care provider and have evidence of BMI documentation, counseling for nutrition and counseling for physical activity
NQF 0041 PQRI* 110	Preventative Care and Screening: Influenza Immunization for patients 50 years old or older	% of patients aged 50 years and older who received an influenza immunization during the flu season (September through February)
NQF 0038	Childhood Immunization Status	% of children >= 2 years old who had four diphtheria, tentanus and acellular pertussis; three polio, one measles, mumps, and rubella; tow H influenza type B; three hepatitis B; one chicken pox; four pneumococcal conjugate; two hepatitis A; two or three rotavirus; and two influenza vaccines by their second birthday. The measure calculates a rate for each vaccine and nine separate combination rates.

Stage 1 – Core, Menu and Clinical Quality Measures for Eligible Professionals

Eligible Professional (EP)	**Stage 1 Clinical Quality Measures – Additional – Select 3**	*NQF – National Quality Forum *PQRI – Physician's Quality Reporting Initiative
Number	**Objective**	**Measure**
NQF 0001	Asthma Assessment Description	Percentage of patients aged 5 through 40 years with a diagnosis of asthma and who have been seen for at least 2 office visits, who were evaluated during at least one office visit within 12 months for the frequency (numeric) of daytime and nocturnal asthma symptoms.
NQF 0002	Pharyngitis - Children	Appropriate Testing for Children with Pharyngitis Description: Percentage of children 2-18 years of age who were diagnosed with pharyngitis, dispensed an antibiotic and received a group A streptococcus (strep) test for the episode.
NQF 0004	Alcohol and Drug Dependence	Initiation and Engagement of Alcohol and Other Drug Dependence Treatment: (a) Initiation, (b) Engagement Description: The percentage of adolescent and adult patients with a new episode of alcohol and other drug (AOD) dependence who initiate treatment through an inpatient AOD admission, outpatient visit, intensive outpatient encounter or partial hospitalization within 14 days of the diagnosis and who initiated treatment and who had two or more additional services with an AOD diagnosis within 30 days of the initiation visit.
NQF 0012	Prenatal Care: HIV Screening	Percentage of patients, regardless of age, who gave birth during a 12-month period who were screened for HIV infection during the first or second prenatal care visit.
NQF 0014	Prenatal Care: Anti-D immune Globulin	Percentage of D (Rh) negative, unsensitized patients, regardless of age, who gave birth during a 12-month period who received anti-D immune globulin at 26-30 weeks gestation.
NQF 0018	Controlling High Blood Pressure	The percentage of patients 18-85 years of age who had a diagnosis of hypertension and whose BP was adequately controlled during the measurement year

Stage 1 – Core, Menu and Clinical Quality Measures for Eligible Professionals

Eligible Professional (EP)	**Stage 1 Clinical Quality Measures – Additional – Select 3**	*NQF – National Quality Forum *PQRI – Physician's Quality Reporting Initiative
Number	**Objective**	**Measure**
NQF 0027	Tobacco Use Cessation	a. Advising Smokers and Tobacco Users to Quit, b. Discussing Smoking and Tobacco Use Cessation Medications, c. Discussing Smoking and Tobacco Use Cessation Strategies Description: Percentage of patients 18 years of age and older who were current smokers or tobacco users, who were seen by a practitioner during the measurement year and who received advice to quit smoking or tobacco use or whose practitioner recommended or discussed smoking or tobacco use cessation medications, methods or strategies.
NQF 0031 .	Breast Cancer Screening	Percentage of women 40-69 years of age who had a mammogram to screen for breast cancer.
NQF 0032	Cervical Cancer Screening	Percentage of women 21-64 years of age, who received one or more Pap tests to screen for cervical cancer
NQF 0033	Chlamydia Screening for Women	Percentage of women 15- 24 years of age who were identified as sexually active and who had at least one test for chlamydia during the measurement year.
NQF 0034	Colorectal Cancer Screening	Percentage of adults 50-75 years of age who had appropriate screening for colorectal cancer.
NQF 0036	Appropriate Medications for Asthma	Percentage of patients 5 - 50 years of age who were identified as having persistent asthma and were appropriately prescribed medication during the measurement year. Report three age stratifications (5-11 years, 12-50 years, and total).
NQF 0043	Pneumonia Vaccination	Percentage of patients 65 years of age and older who have ever received a pneumococcal vaccine.
NQF 0047	Asthma Pharmacologic Therapy	Percentage of patients aged 5 through 40 years with a diagnosis of mild, moderate, or severe persistent asthma who were prescribed either the preferred long-term control medication (inhaled corticosteroid) or an acceptable alternative treatment.

Stage 1 – Core, Menu and Clinical Quality Measures for Eligible Professionals

Eligible Professional (EP)	**Stage 1 Clinical Quality Measures – Additional – Select 3**	*NQF – National Quality Forum *PQRI – Physician's Quality Reporting Initiative
Number	**Objective**	**Measure**
NQF 0052	Use of Imaging Study: Low Back Pain	Percentage of patients with a primary diagnosis of low back pain who did not have an imaging study (plain x-ray, MRI, CT scan) within 28 days of diagnosis.
NQF 0055	Diabetes: Eye Exam	Percentage of patients 18 -75 years of age with diabetes (type 1 or type 2) who had a retinal or dilated eye exam or a negative retinal exam (no evidence of retinopathy) by an eye care professional.
NQF 0056	Diabetes: Foot Exam	The percentage of patients aged 18 - 75 years with diabetes (type 1 or type 2) who had a foot exam (visual inspection, sensory exam with monofilament, or pulse exam).
NQF 0059	Diabetes Control: Hemoglobin A1c >9.0%	Percentage of patients 18 - 75 years of age with diabetes (type 1 or type 2) who had hemoglobin A1c > 9.0%.
NQF 0061	Diabetic Patients who elevated mmhg V140/90	Percentage of patients 18 - 75 years of age with diabetes (type 1 or type 2) who had blood pressure <140/90 mmHg.
NQF 0062	Nephropathy Screening- Urine	Percentage of patients 18 - 75 years of age with diabetes (type 1 or type 2) who had a nephropathy screening test or evidence of nephropathy.
NQF 0064	Diabetes Control: LDL < 100mg/dl	Percentage of patients 18-75 years of age with diabetes (type 1 or type 2) who had LDL-C < 100 mg/dL).
NQF 0067	Antiplatelet Therapy	Oral Antiplatelet Therapy Prescribed for Patients with CAD Description: Percentage of patients aged 18 years and older with a diagnosis of CAD who were prescribed oral antiplatelet therapy.
NQF 0068	Ischemic Vascular Disease: Asparin or other Antithrombotic	Use of Aspirin or Another Antithrombotic Description: Percentage of patients 18 years of age and older who were discharged alive for acute myocardial infarction (AMI), coronary artery bypass graft (CABG) or percutaneous transluminal coronary angioplasty (PTCA) from January 1-November 1 of the

Eligible Professional (EP)	**Stage 1 Clinical Quality Measures – Additional – Select 3**	*NQF – National Quality Forum *PQRI – Physician's Quality Reporting Initiative
Number	**Objective**	**Measure**
		year prior to the measurement year, or who had a diagnosis of ischemic vascular disease (IVD) during the measurement year and the year prior to the measurement year and who had documentation of use of aspirin or another antithrombotic during the measurement year.
NQF 0070	Coronoary Artery Disease: Beta Blocker Therapy Post Myocardial Infarction	Percentage of patients aged 18 years and older with a diagnosis of CAD and prior MI who were prescribed beta-blocker therapy.
NQF 0073	Blood Pressure Management: Ischemic Valve Disease	Percentage of patients 18 years of age and older who were discharged alive for acute myocardial infarction (AMI), coronary artery bypass graft (CABG) or percutaneous transluminal coronary angioplasty (PTCA) from January 1-November 1 of the year prior to the measurement year, or who had a diagnosis of ischemic vascular disease (IVD) during the measurement year and the year prior to the measurement year and whose recent blood pressure is in control (<140/90 mmHg).
NQF 0074	Coronary Artery Disease: Lipid Lowering Therapy	Percentage of patients aged 18 years and older with a diagnosis of CAD who were prescribed a lipid-lowering therapy (based on current ACC/AHA guidelines).
NQF 0075	IVD: Complete Lipid Panel and LDL Control	Percentage of patients 18 years of age and older who were discharged alive for acute myocardial infarction (AMI), coronary artery bypass graft (CABG) or percutaneous transluminal angioplasty (PTCA) from January 1-November1 of the year prior to the measurement year, or who had a diagnosis of ischemic vascular disease (IVD) during the measurement year and the year prior to the measurement year and who had a complete lipid profile performed during the measurement year and whose LDL-C<100 mg/dL.
NQF 0081	Heart Failure: ACE/ ARB Therapy For LVSD (LVEF <40%)	Percentage of patients aged 18 years and older with a diagnosis of heart failure and LVSD (LVEF< 40%) who were prescribed ACE inhibitor or ARB therapy.

Stage 1 – Core, Menu and Clinical Quality Measures for Eligible Professionals

Eligible Professional (EP)	**Stage 1 Clinical Quality Measures – Additional – Select 3**	*NQF – National Quality Forum *PQRI – Physician's Quality Reporting Initiative
Number	**Objective**	**Measure**
NQF 0083 .	Heart Failure: Beta Blocker for LVSD	Percentage of patients aged 18 years and older with a diagnosis of heart failure who also have LVSD (LVEF < 40%) and who were prescribed beta-blocker therapy.
NQF 0084	Heart Failure: Warfarin Therapy	Percentage of all patients aged 18 years and older with a diagnosis of heart failure and paroxysmal or chronic atrial fibrillation who were prescribed warfarin therapy.
NQF 0086	Primary Open Angle Glaucoma	Percentage of patients aged 18 years and older with a diagnosis of POAG who have been seen for at least two office visits who have an optic nerve head evaluation during one or more office visits within 12 months.
NQF 0088	Diabetic Retinopathy: Macular Edema	Percentage of patients aged 18 years and older with a diagnosis of diabetic retinopathy who had a dilated macular or fundus exam performed which included documentation of the level of severity of retinopathy and the presence or absence of macular edema during one or more office visits within 12 months.
NQF 0089	Diabetes Management: Retinopathy Screening	Percentage of patients aged 18 years and older with a diagnosis of diabetic retinopathy who had a dilated macular or fundus exam performed with documented communication to the physician who manages the ongoing care of the patient with diabetes mellitus regarding the findings of the macular or fundus exam at least once within 12 months.
NQF 0105	Depression Management	(a) Effective Acute Phase Treatment,(b)Effective Continuation Phase Treatment Description: The percentage of patients 18 years of age and older who were diagnosed with a new episode of major depression, treated with antidepressant medication, and who remained on an antidepressant medication treatment.
NQF 0385	Colon Cancer: Chemotherapy	Percentage of patients aged 18 years and older with Stage IIIA through IIIC colon cancer who are referred for adjuvant chemotherapy, prescribed adjuvant chemotherapy, or have previously received adjuvant chemotherapy

Eligible Professional (EP)	**Stage 1 Clinical Quality Measures – Additional – Select 3**	*NQF – National Quality Forum *PQRI – Physician's Quality Reporting Initiative
Number	**Objective**	**Measure**
		within the 12-month reporting period.
NQF 0387	Breast Cancer: Hormonal Therapy	Percentage of female patients aged 18 years and older with Stage IC through IIIC, ER or PR positive breast cancer who were prescribed tamoxifen or aromatase inhibitor (AI) during the 12-month reporting period.
NQF 0389	Prostate Cancer: Avoid overuse of Bone Scan	Percentage of patients, regardless of age, with a diagnosis of prostate cancer at low risk of recurrence receiving interstitial prostate brachytherapy, OR external beam radiotherapy to the prostate, OR radical prostatectomy, OR cryotherapy who did not have a bone scan performed at any time since diagnosis of prostate cancer.
NQF 0575	Diabetes Control: Hemoglobin A1c <8.0%	The percentage of patients 18-75 years of age with diabetes (type 1 or type 2) who had hemoglobin A1c <8.0%.

Click here to return to Agenda.
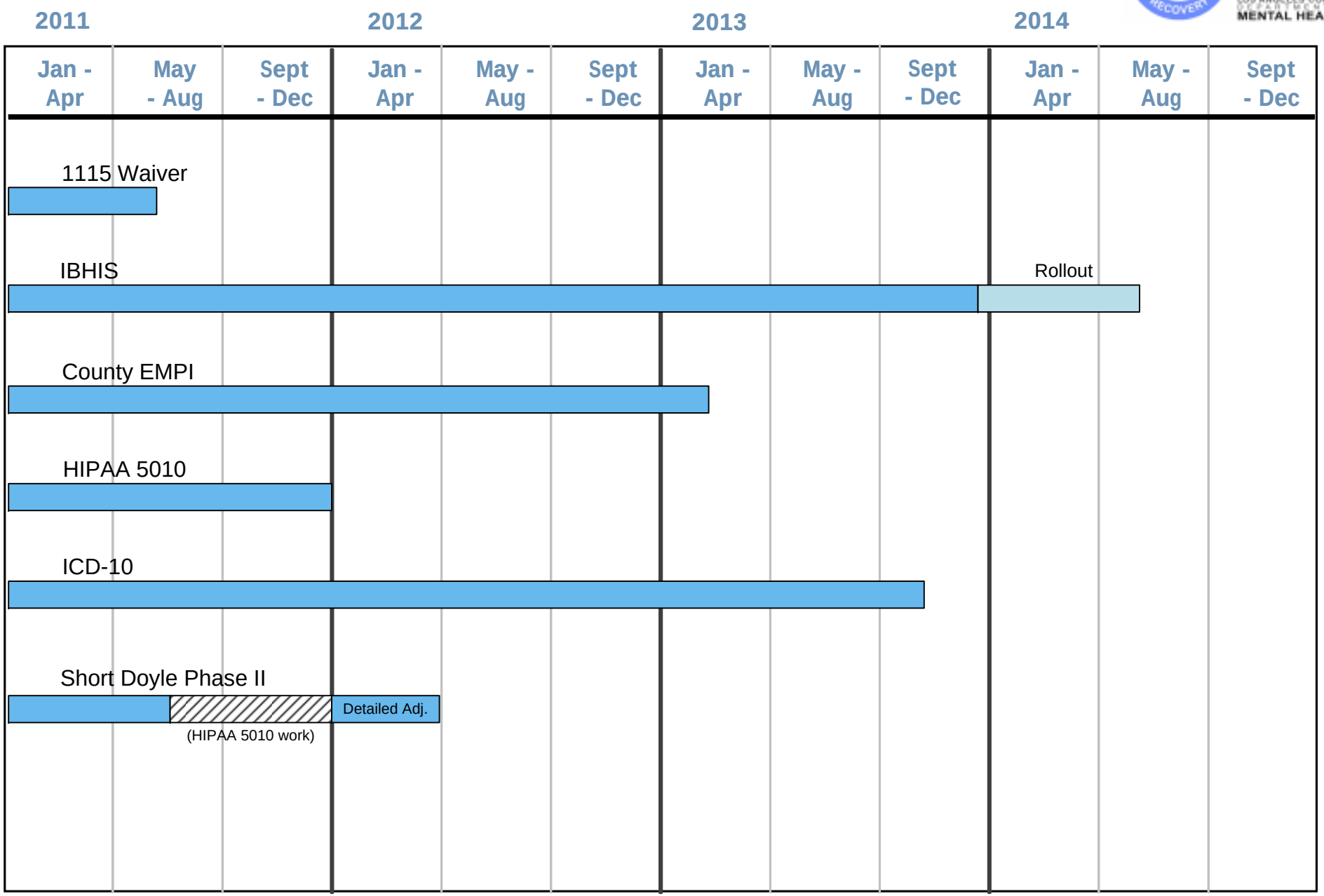
LAC DMH Enterprise Applications Projects Timeline (DRAFT)